24.1 Exercises - Production and use of ultrasound

1.

a. By reference to ultrasound waves, state what is meant by the specific acoustic impedance of a medium.

.....

.....[2]

b. A parallel beam of ultrasound of intensity I is incident normally on a muscle of thickness 3.4 cm, as shown in Fig.

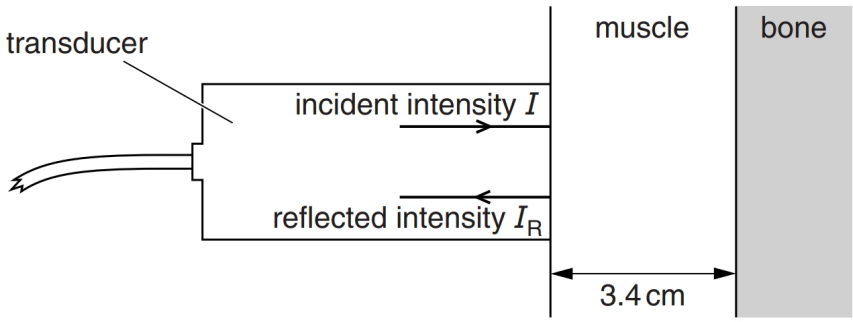

The ultrasound wave is reflected at a muscle-bone boundary. The intensity of the ultrasound received back at the transducer is IR.

Some data for bone and muscle are given in Fig below.

	specific acoustic impedance / $kg\,m^{-2}\,s^{-1}$	linear absorption coefficient / m^{-1}
bone	6.4×10^6	130
muscle	1.7×10^6	23

i. The intensity reflection coefficient α for two media having specific acoustic impedances Z_1 and Z_2. Calculate the fraction of the ultrasound intensity that is reflected at the muscle-bone boundary.

fraction = ... [2]

ii. Calculate the fraction of the ultrasound intensity that is transmitted through a thickness of 3.4 cm of muscle.

fraction = ... [3]

iii. Use your answers in (i) and (ii) to determine the ratio $\frac{I_R}{I}$.

ratio = ... [2]

2.

a. Data for some media are given in Fig.

medium	speed of ultrasound / $m\,s^{-1}$	acoustic impedance / $kg\,m^{-2}\,s^{-1}$
air	330	4.3×10^2
gel	1500	1.5×10^6
soft tissue	1600	1.6×10^6
bone	4100	7.0×10^6

Use data from Fig. to calculate a value for the density of bone.

density = ... kg m^{-3} [1]

b. A parallel beam of ultrasound has intensity I. It is incident at right-angles to a boundary between two media, as shown in Fig.

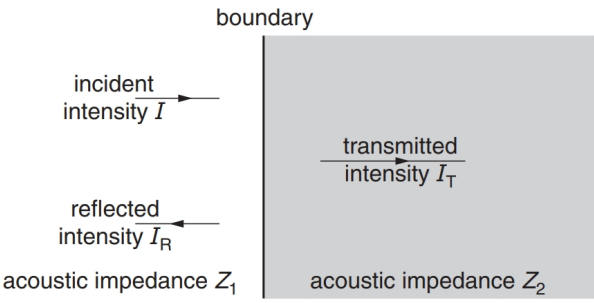

The media have acoustic impedances of Z_1 and Z_2 The transmitted intensity of the ultrasound beam is I_T and the reflected intensity is I_R.

i. State the relation between I, I_T and I_R.

.....[1]

ii. The reflection coefficient α is given by the expression

$$\alpha = \frac{(Z_2 - Z_1)^2}{(Z_2 + Z_1)^2}.$$

Use data from Fig. 10.1 to determine the reflection coefficient α for a boundary between

a) gel and soft tissue,

α = ... [2]

b) air and soft tissue.

α = ... [2]

c. By reference to your answers in (b)(ii), explain the use of a gel on the surface of skin during ultrasound diagnosis.

.....

.....

.....[3]

3.

a. Explain the main principles behind the use of ultrasound to obtain diagnostic information about internal body structures.

.....

.....

.....

.....

.....

.....[6]

b. A parallel beam of ultrasound has intensity I0 as it enters a muscle of thickness 4.6cm, as illustrated in Fig.

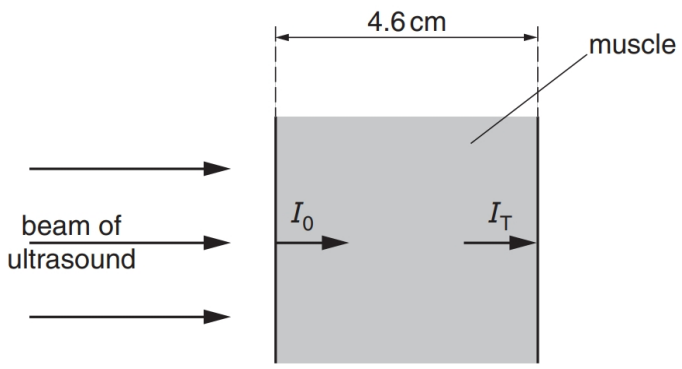

The intensity of the beam just before it leaves the muscle is I_T.

The ratio I_0/I_T is found to be 2.9.

Calculate the linear attenuation (absorption) coefficient μ of the ultrasound in the layer of muscle.

μ = ... cm^{-1} [3]

4.

a. The intensity reflection coefficient α is given by the expression

$$\alpha = \frac{(Z_2 - Z_1)^2}{(Z_2 + Z_1)^2}.$$

Explain the meanings of the symbols in this expression. [2]

α: .....

Z_2 and Z_1: .....[2]

b. A piezoelectric transducer containing a quartz crystal is used to obtain diagnostic information about internal structures.

Describe the function of the quartz crystal.

.....

.....

.....[3]

c. A parallel beam of ultrasound has intensity I_0 as it enters a muscle.

The beam passes through a thickness of 3.4 cm of muscle before being incident on the boundary with a bone, as shown in Fig.

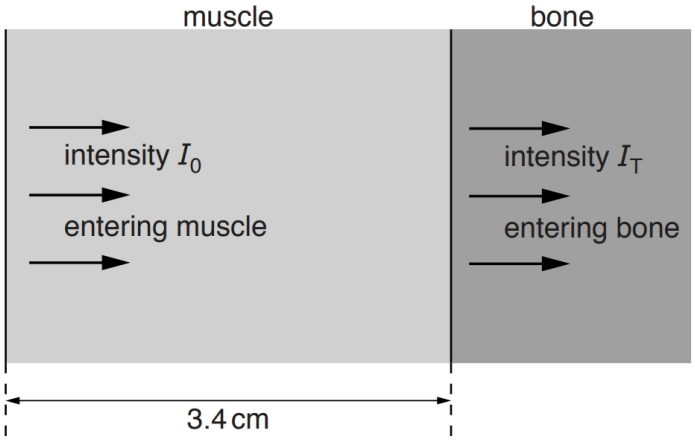

The intensity of the ultrasound beam as it passes into the bone is IT.

Some data for muscle and bone are given in Fig.

	linear absorption coefficient / m^{-1}	specific acoustic impedance / $kg\,m^{-2}\,s^{-1}$
muscle	23	1.7×10^6
bone	130	6.3×10^6

Calculate the ratio I_T/I_0.

ratio = ... [5]